AS/NZS 1170.3:2003
(Incorporating Amendment No. 1)

AS/NZS 1170.3:2003

Australian/New Zealand Standard™

Structural design actions

Part 3: Snow and ice actions

Accessed by UNIVERSITY OF SYDNEY on 10 Feb 2011

STANDARDS Australia

STANDARDS NEW ZEALAND PAEREWA AOTEAROA

This Joint Australian/New Zealand Standard was prepared by Joint Technical Committee BD-006, General Design Requirements and Loading on Structures. It was approved on behalf of the Council of Standards Australia on 1 November 2002 and on behalf of the Council of Standards New Zealand on 13 December 2002.
This Standard was published on 16 January 2003.

The following are represented on Committee BD-006:

Association of Consulting Engineers Australia
Australian Building Codes Board
Australian Institute of Steel
Building Research Association of New Zealand
Cement Concrete and Aggregate Australia-Cement
Concrete Masonry Association of Australia Limited
Engineers Australia
Housing Industry Association
Institution of Professional Engineers New Zealand
James Cook University
Master Builders Australia
New Zealand Heavy Engineering Research Association
Property council of Australia
Steel Reinforcement Institute of Australia
Timber Development Association
University of Canterbury New Zealand
University of Melbourne
University of Newcastle

Keeping Standards up-to-date

Standards are living documents which reflect progress in science, technology and systems. To maintain their currency, all Standards are periodically reviewed, and new editions are published. Between editions, amendments may be issued. Standards may also be withdrawn. It is important that readers assure themselves they are using a current Standard, which should include any amendments which may have been published since the Standard was purchased.

Detailed information about joint Australian/New Zealand Standards can be found by visiting the Standards Web Shop at www.standards.com.au or Standards New Zealand web site at www.standards.co.nz and looking up the relevant Standard in the on-line catalogue.

Alternatively, both organizations publish an annual printed Catalogue with full details of all current Standards. For more frequent listings or notification of revisions, amendments and withdrawals, Standards Australia and Standards New Zealand offer a number of update options. For information about these services, users should contact their respective national Standards organization.

We also welcome suggestions for improvement in our Standards, and especially encourage readers to notify us immediately of any apparent inaccuracies or ambiguities. Please address your comments to the Chief Executive of either Standards Australia or Standards New Zealand at the address shown on the back cover.

This Standard was issued in draft form for comment as DR 05368.

Accessed by UNIVERSITY OF SYDNEY on 10 Feb 2011

PREFACE

This Standard was prepared by the Joint Standards Australia/Standards New Zealand Committee BD-006, General Design Requirements and Loading on Structures, to supersede AS 1170.3—1990, *Minimum design loads on structures*, Part 3: *Snow loads* and, in part, NZS 4203:1992, *Code of Practice for General Structural Design and Design Loadings for Buildings*.

This Standard incorporates Amendment No. 1 (April 2007). The changes required by the Amendment are indicated in the text by a marginal bar and amendment number against the clause, note, table, figure or part thereof affected.

This Standard is published as a joint Standard and it is intended for use in New Zealand as well as Australia; however, NZS 4203, *General structural design and design loadings for buildings*, remains current in New Zealand until the publication of all parts (including Part 4: Earthquake action) and for a transition period afterwards.

A1

The objective of this Standard is to provide designers of structures with values for snow and ice actions for use in the limit states design of structures subject to such actions.

A1 This Standard is Part 3 of the AS/NZS 1170 series, *Structural design actions,* which comprises the following parts, each of which has an accompanying Commentary published as a Supplement:

AS/NZS		
1170.0	Part 0:	General principles
1170.1	Part 1:	Permanent, imposed and other actions
1170.2	Part 2:	Wind actions
1170.3	Part 3:	Snow and ice actions
AS		
1170.4	Part 4:	Earthquake actions
NZS		
1170.5	Part 5:	Earthquake actions—New Zealand

A1 The Commentary to this Standard is AS/NZS 1170.3 Supp 1, *Structural design actions—Snow and ice actions—Commentary* (Supplement to AS/NZS 1170.3:2003).

The Commentary gives background to the Clauses of the Standard. It also gives worked examples and information on issues such as siting of buildings, placing of doors, chimneys and similar and detailing of guttering, valleys, ridges, protrusions and cladding.

This Standard is not equivalent to ISO 4355:1998, *Bases for design of structures—Determination of snow loads on roofs*; however, ISO 4355 is drafted only as a guide to preparation of national Standards and the format given in ISO 4355 has been adopted in principle. A number of other Standards were consulted, including ENV 1991-2-3:1995, *Basis of design and actions on structures*, Part 2.3: *Actions on structures—Snow loads*.

This Standard is not equivalent to ISO 12494:2001, *Atmospheric icing of structures.* The adoption of this ISO Standard would have involved the collection of data on ice accumulation in Australia or New Zealand, which were not available at the time of publication.

Major changes from the previous editions of this Standard include the following:

(a) Amalgamation of Australian and New Zealand Standards.

(b) ISO 4355 has been adopted, where possible.

Accessed by UNIVERSITY OF SYDNEY on 10 Feb 2011

(c) Incorporating changes resulting from the use of annual probabilities of exceedance (found for Australia in the Building Code of Australia and for New Zealand in AS/NZS 1170.0). (An amendment will accompany the publication of this Standard to change AS/NZS 1170.0, to remove the Appendix E, which provided adjustment of the 1990 edition of AS 1170.3.)

(d) Reassessment of snow loads and factors for varying probability of exceedance of load have been included to bring the Standard into accordance with AS/NZS 1170.0.

(e) Changing the factor for combinations involving snow (given in AS/NZS 1170.0) has been changed to 1.0 from 1.5 and 1.2 (Australia and New Zealand respectively) due to the introduction of annual probability of exceedance (see Clause 5.2).

(f) For New Zealand, introduction of alpine and sub-alpine regions.

Notes to the text contain information and guidance and are not considered to be an integral part of the Standard.

A1 *AS/NZS 1170.3 is independent of the design requirement specified—thus becoming a purely technical document. It may be used to calculate snow depths and roof loads given any annual probability of exceedance. The annual probability of exceedance (P) defines the snow or ice event (in which pressures and forces occur). Thus a high accumulation of snow with an annual probability of exceedance in the range of 1/200 to 1/2000 is used for ultimate limit states, while a much more frequent event (say of 1/20 or 1/25) might be used for serviceability limit states.*

In AS/NZS 1170.3, Section 5 gives the ground snow loads factored for selected annual probabilities of exceedance using the probability factor kP and Section 4 sets out the determination of the snow actions (roof loads) that are appropriate for the annual probability specified.

The annual probability of exceedance is not defined in AS/NZS 1170.3, but is set out in AS/NZS 1170.0 [and by further reference for ultimate limit states in the BCA (Table of annual probabilities of exceedance) and in the Guide to the BCA (examples of structures for importance levels)]. AS/NZS 1170.0 gives requirements for New Zealand structures and for Australian structures not covered by the BCA. Guidance for serviceability events and associated limits is given in an informative Appendix of AS/NZS 1170.0 for loads associated with an appropriate annual probability of exceedance (P) for serviceability.

Accessed by UNIVERSITY OF SYDNEY on 10 Feb 2011

CONTENTS

Page

SECTION 1 SCOPE AND GENERAL
1.1 SCOPE ... 5
1.2 APPLICATION ... 5
1.3 NORMATIVE DOCUMENTS ... 5
1.4 DETERMINATION OF DESIGN ACTIONS ... 6
1.5 DEFINITIONS ... 6
1.6 UNITS ... 7
1.7 NOTATION ... 7

SECTION 2 SNOW REGIONS
2.1 GENERAL ... 9
2.2 AUSTRALIA ... 9
2.3 NEW ZEALAND ... 9

SECTION 3 ICE ACTION
3.1 GENERAL ... 12
3.2 DETERMINATION OF FORCES ... 12
3.3 ICE DENSITY ... 12
3.4 ICE THICKNESS ... 12

SECTION 4 SNOW ACTION
4.1 GENERAL ... 13
4.2 DESIGN SNOW LOADS ... 13

SECTION 5 GROUND SNOW LOAD
5.1 GENERAL ... 16
5.2 PROBABILITY FACTOR ... 16
5.3 GROUND SNOW LOADS FOR ALPINE REGIONS ... 17
5.4 GROUND SNOW LOADS FOR SUB-ALPINE REGIONS ... 17

SECTION 6 SHAPE COEFFICIENTS FOR ALPINE REGIONS
6.1 GENERAL ... 25
6.2 BALANCED SNOW LOAD ... 25
6.3 MONO-PITCHED ROOFS ... 25
6.4 DUO-PITCHED ROOFS ... 26
6.5 MULTI-PITCHED ROOFS ... 27
6.6 DRIFTING CAUSED BY OBSTRUCTIONS HIGHER THAN THE ROOF ... 27
6.7 DRIFTING AT PROJECTIONS AND OBSTRUCTIONS ... 29
6.8 CYLINDRICAL ROOFS ... 30

SECTION 7 SHAPE COEFFICIENTS FOR SUB-ALPINE REGIONS
7.1 GENERAL ... 31
7.2 SHAPE COEFFICIENTS AS FOR ALPINE REGIONS ... 31
7.3 OBSTRUCTED ROOFS ... 31
7.4 DRIFTING ON LOWER ROOFS ... 32
7.5 CURVED ROOFS ... 33

APPENDIX A BIBLIOGRAPHY ... 34

Accessed by UNIVERSITY OF SYDNEY on 10 Feb 2011

STANDARDS AUSTRALIA/STANDARDS NEW ZEALAND

Australian/New Zealand Standard
Structural design actions

Part 3: Snow and ice actions

SECTION 1 SCOPE AND GENERAL

1.1 SCOPE

This Standard sets out procedures for determining snow actions on roofs and ice actions to be used in the structural design of structures. This Standard is to be read in conjunction with AS/NZS 1170.0.

A1 NOTE: In this document, the words 'this Standard' indicate AS/NZS 1170.3, which is regarded as Part 3 of the AS/NZS 1170 series of Standards (see Preface).

The principles given in this Standard are generally applicable to all structures.

This Standard does not cover the following:

(a) Impact resulting from snow or ice sliding off or falling from a higher roof.

(b) Action that could occur if snow and ice block drainage systems.

(c) Actions resulting from snow and ice on bridges.

(d) The additional wind loads which could result from changes in shape or size of the building structure due to the presence of snow or the accretion of ice.

(e) Sites where snow is present all the year or at altitudes above 1800 m in New Zealand.

(f) Lateral loading on structures due to snow on the ground (e.g. lateral loads exerted by drifts).

(g) Vulnerability of a site to avalanche, avalanche blast and landslide.

(h) Increase in load due to heavy rain falling on snow.

(i) Possible changes to snow loads due to future climatic changes.

1.2 APPLICATION

This Standard shall be read in conjunction with AS/NZS 1170.0.

A1 NOTE: Use of methods or information not given in this Standard should be justified by a special study (see AS/NZS 1170.0).

A1 ### 1.3 NORMATIVE DOCUMENTS

AS/NZS

1170	Structural design actions	
1170.0	Part 0:	General principles
1170.2	Part 2:	Wind actions

A1

A1 NOTE: Informative documents referred to in this Standard are listed in Appendix A.

Accessed by UNIVERSITY OF SYDNEY on 10 Feb 2011

COPYRIGHT

1.4 DETERMINATION OF DESIGN ACTIONS

Values of snow actions (F_{sn}) and ice actions (F_{ice}) for use in design shall be appropriate for the type of structure or structural element, its intended use and exposure to snow and ice action. This Clause shall be deemed to be satisfied when snow and ice actions are determined in accordance with the procedures detailed in Sections 3 and 4, using the values given in this Standard.

A1 NOTE: Snow and ice actions may be determined for either ultimate or serviceability purposes. Such values calculated using the applicable annual probability of exceedance (P) would be used in the combinations given in AS/NZS 1170.0 as S_u or S_s as appropriate. Information on serviceability conditions and criteria can be found in AS/NZS 1170.0.

1.5 DEFINITIONS

1.5.1 Alpine

Regions where the maximum snow load is usually due to accumulation from a number of successive snowfalls.

1.5.2 Characteristic snow load on the ground (s_g)

Load at a site with accepted probability of not being exceeded during some reference period (years).

NOTE: In meteorology the term 'weight of the ground snow cover' is also used.

1.5.3 Exposure reduction coefficient (C_e)

Coefficient defining the balanced load on a flat horizontal roof of a cold building, as a fraction of the characteristic snow load on the ground.

NOTE: The exposure coefficient includes the effect of snow removal from flat roofs by wind. This effect depends on the temperature and the corresponding wind at the site.

1.5.4 Obstructed roof

Roof that is not able to shed its snow load through sliding and the action of wind.

NOTE: Parapets, snow fences, steps in roofs, valleys abutting roofs and similar usually prevent snow being shed from a sloping roof, consequently the roof is considered to be obstructed. Obstruction may also be caused by snow that builds up above eaves that are low to the ground.

1.5.5 Roof

For the purposes of this Standard, roof means the roof or other elevated surface of the building upon which snow may accumulate.

1.5.6 Shape coefficient (μ_i)

Shape coefficient with primary dependence on the geometry of the roof, in particular the roof slope.

1.5.7 Sheltered

Sites where the roof is protected from the wind by obstructions such as other structures, terrain features or numbers of closely spaced trees higher than the roof.

1.5.8 Semi-sheltered

Sites where the roof is only partially protected by numbers of scattered obstructions higher than the roof (e.g., scattered trees).

1.5.9 Sub-alpine

Regions where the maximum snow load is usually due to a single snowfall.

Accessed by UNIVERSITY OF SYDNEY on 10 Feb 2011

COPYRIGHT

1.5.10 Terrain classification

A classification based on the relationship of the topography to snow producing ridges.

NOTE: This is not the same as the terrain categories for wind defined in AS/NZS 1170.2. Information on the classification of locations is given in AS/NZS 1170.3 Supp 1, *Structural design actions—Snow and ice actions—Commentary* (Supplement to AS/NZS 1170.3:2002).

1.5.11 Value of snow load on roof (*s*)

Product of the characteristic snow load on the ground and appropriate snow shape coefficients.

NOTES:

1 The value is also dependent on the roof shape, exposure of the roof and the thermal characteristics of the building.

2 It refers to a horizontal projection of the area of the roof.

1.5.12 Windswept

Sites where the roof is exposed on all sides, with no protection provided by obstructions, trees, or terrain features higher than the roof.

1.6 UNITS

Except where specifically noted, this Standard uses the SI units of kilograms, metres, seconds, pascals and newtons (kg, m, s, Pa, N).

1.7 NOTATION

Unless stated otherwise the notation used in this Standard shall have the following meanings with respect to a structure, member or condition to which a Clause is applied.

b = width, in metres

b = distance on plan from the guard or obstacle to the ridge, in metres

C_e = exposure reduction coefficient, as given in Clause 4.2.2

F_{ice} = ice action

F_{sn} = snow action

F = force

h = height, in metres

h_0 = height above Australian Height Datum or New Zealand mean sea level, in metres

h_d = difference in roof elevations at intersection of roofs or between an adjacent obstruction and the roof, in metres

k = coefficient to take account of the irregular shape of snow at roof edges

k_t = multiplying factor for terrain classification

k_l = multiplying factor for latitude

k_P = probability factor (for use with probabilities of exceedance, see AS/NZS 1170.0)

l = length of cylindrical roof, in metres

l_1 = length of snow accumulation on cylindrical roof, in metres

l_s = length of snow drift, in metres

M_h = hill shape multiplier, obtained from AS/NZS 1170.2

Accessed by UNIVERSITY OF SYDNEY on 10 Feb 2011

COPYRIGHT

s	=	value of snow load on the roof, in kilonewtons per square metre
s_g	=	characteristic value of snow load on the ground, in kilonewtons per square metre
s_e	=	snow load per metre of roof edge due to overhang, in kilonewtons per metre
α	=	pitch of roof, measured from horizontal, in degrees
β	=	angle between the horizontal and the tangent to the curve for a cylindrical roof, in degrees
γ	=	average weight density of snow, in kilonewtons per cubic metre
μ_i	=	shape coefficient (μ = mu)
μ_1, μ_2	=	shape coefficients for various positions on a roof and types of snow load (balanced load, drift load, slide load)
μ_b	=	shape coefficient, due to balanced snow accumulation
μ_d	=	shape coefficient, due to drifting
$\mu_{b,d}$	=	shape coefficient, due to balanced and drift accumulation
μ_s	=	shape coefficient, due to sliding

Accessed by UNIVERSITY OF SYDNEY on 10 Feb 2011

COPYRIGHT

SECTION 2 SNOW REGIONS

2.1 GENERAL

Approximate locations of regions are shown in Figures 2.1 and 2.2. The altitude of the site shall be used to determine whether a structure falls into an alpine or sub-alpine region.

NOTE: Sub-alpine regions are those where snow does not generally accumulate between snow-producing weather systems. Design in these areas is generally for lower loads (see Section 5 for determination of ground snow loads). Shape coefficients for sub-alpine regions are given in Section 7.

2.2 AUSTRALIA

Alpine and sub-alpine regions are defined as follows:

(a) AN (Northern Tablelands of New South Wales)—Sub-alpine at all altitudes above 600 m.

(b) AC (Central Tablelands of New South Wales)—Sub-alpine at all altitudes above 600 m.

A1 (c) AS (Southern Tablelands, New South Wales and Victoria):

(i) Sub-alpine between 600 m and 1200 m.

(ii) Alpine ≥1200 m.

(d) AT (Tasmania):

(i) Sub-alpine between 300 m and 900 m.

(ii) Alpine ≥900 m.

2.3 NEW ZEALAND

Alpine and sub-alpine regions are defined as follows:

(a) N1 (southern portion of North Island of New Zealand, see Figure 2.2):

(i) Sub-alpine between 400 m and 1200 m.

(ii) Alpine ≥1200 m.

(b) N2 (South Island of New Zealand):

(i) Sub-alpine between 200 m and 900 m.

(ii) Alpine ≥900 m.

(c) N3 (South Island of New Zealand):

(i) Sub-alpine between 150 m and 900 m.

(ii) Alpine ≥900 m.

(d) N4 and N5 (South Island of New Zealand):

(i) Sub-alpine <900 m.

(ii) Alpine ≥900 m.

Accessed by UNIVERSITY OF SYDNEY on 10 Feb 2011

COPYRIGHT

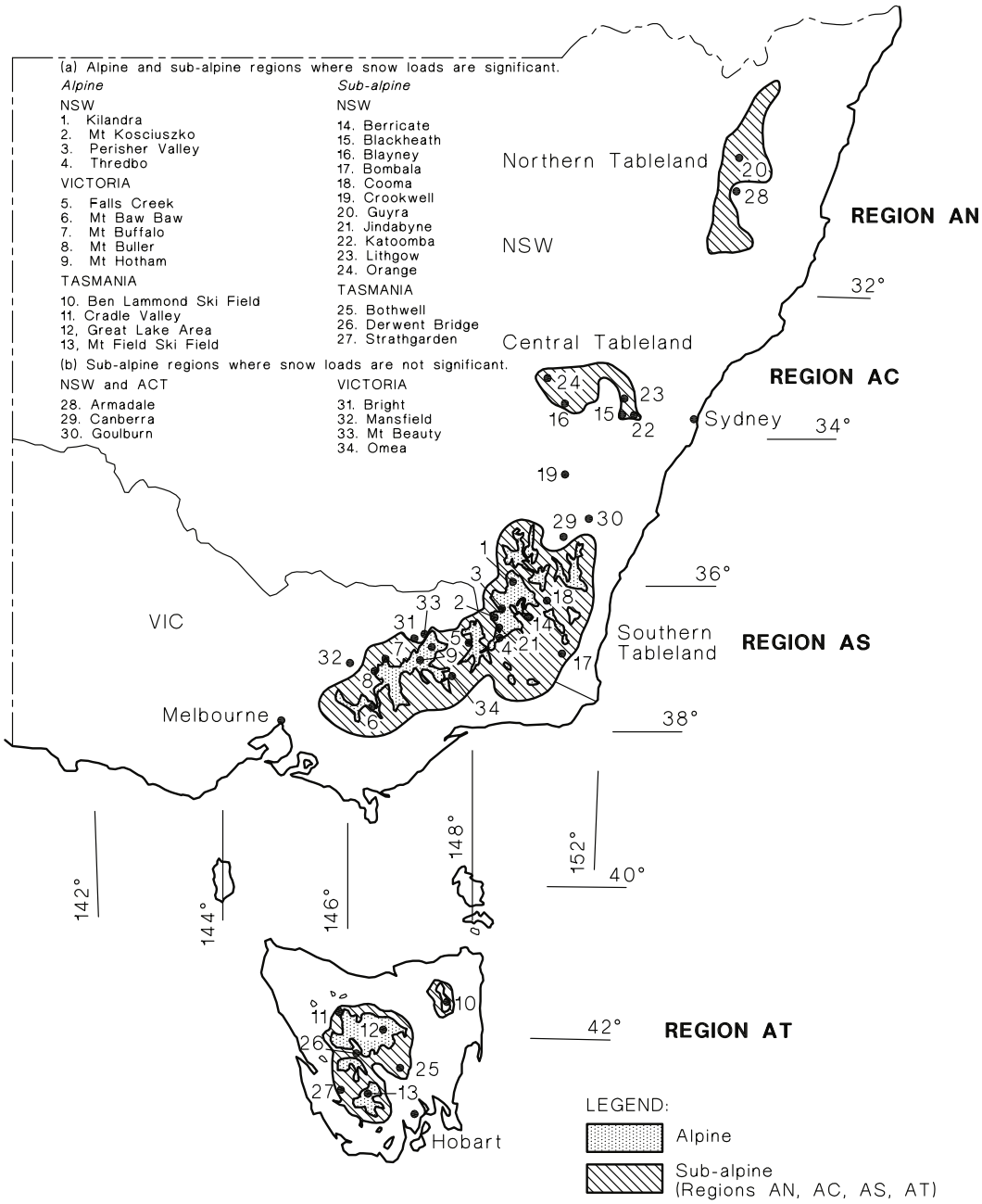

NOTES:

1 This map is approximate only and altitude above Australian Height Datum shall be used to determine snow region.

2 Canberra is not subject to significant snow loads but some outlying areas of the ACT are subject to significant snow loads.

FIGURE 2.1 AUSTRIALIA—APPROXIMATE LOCATIONS OF ALPINE AND SUB-ALPINE REGIONS

Accessed by UNIVERSITY OF SYDNEY on 10 Feb 2011

COPYRIGHT

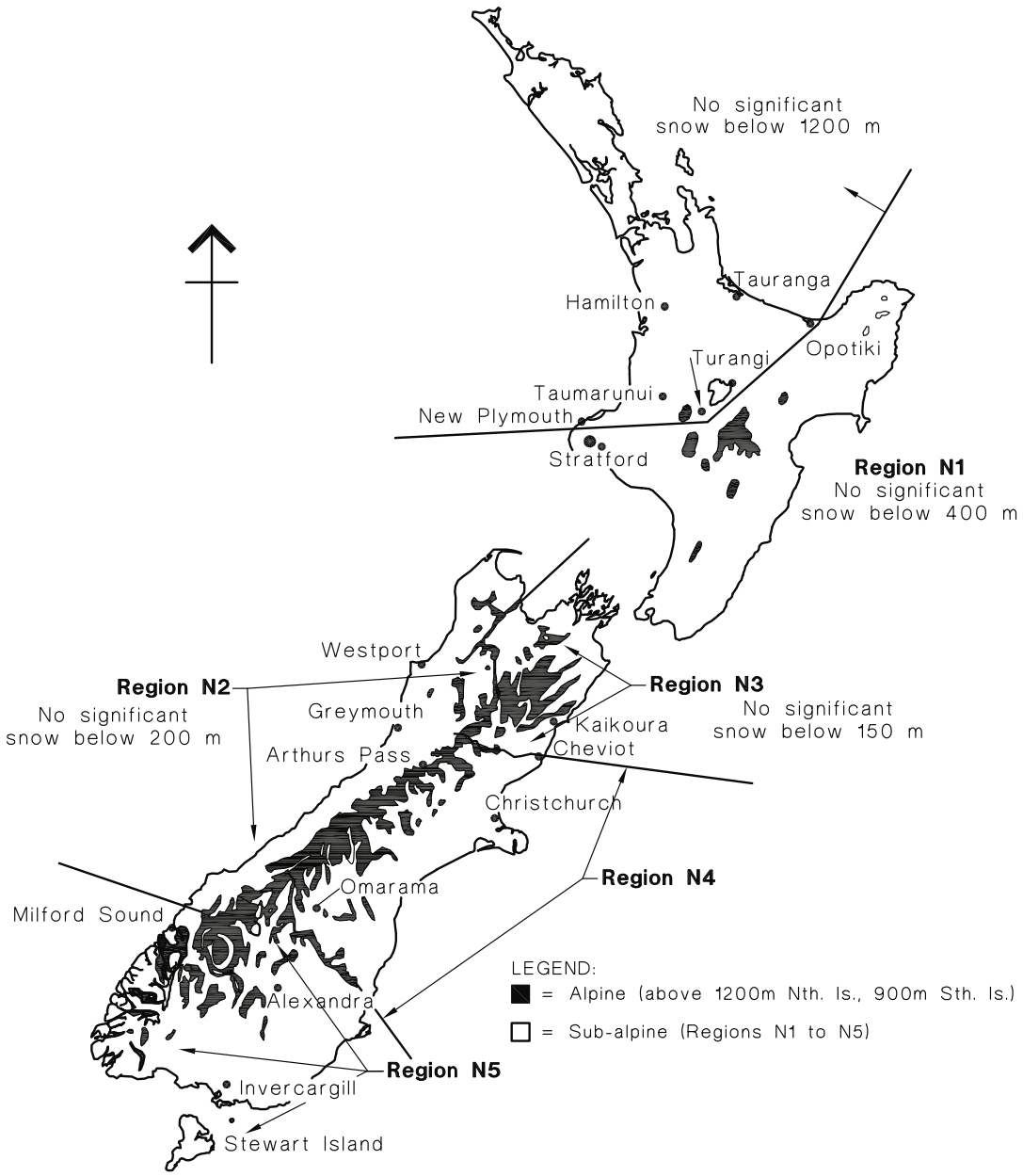

NOTE: This map is approximate only and altitude above mean sea level shall be used to determine snow region. For sub-alpine regions in the South Island (N2, N3, N4 and N5) the regions coincide with the 1988 county boundaries. Where an alpine region exists between sub-alpine regions, the alpine region separates the 2 sub-alpine regions (which extend downwards from 1200 m altitude).

FIGURE 2.2 NEW ZEALAND—APPROXIMATE LOCATIONS OF ALPINE AND SUB-ALPINE REGIONS

Accessed by UNIVERSITY OF SYDNEY on 10 Feb 2011

COPYRIGHT

SECTION 3 ICE ACTION

3.1 GENERAL

Ice action shall be considered within the alpine regions as defined in Section 2.

NOTE: Ice action may need to be considered in other areas where local records or experience indicate that ice accumulations occur.

The following structure types may be sensitive to ice action:

(a) Masts.

(b) Towers.

(c) Antennas and antenna structures.

(d) Cables, stays, guy ropes, and similar.

(e) Rope ways (cable railways).

(f) Structures for ski-lifts.

(g) Exposed buildings or parts of them.

(h) Towers for special types of construction such as transmission lines, wind turbines, and similar.

3.2 DETERMINATION OF FORCES

Ice action shall be taken as being composed of both the weight of ice coating around the members and the wind action on the coated members. The wind action shall be calculated using a wind speed with an annual probability of exceedance of 0.1 (1/10) for the site of the structure being designed (see AS/NZS 1170.2).

NOTE: Lower wind speeds may be appropriate for the more flexible structures (e.g., ropes or cables) as ice may be shed by large deflections or vibrations as wind speed increases.

3.3 ICE DENSITY

The density of ice shall be taken as 915 kg/m^3.

3.4 ICE THICKNESS

In the absence of site specific data, the ice coating thickness for ultimate limit states for all function categories shall be taken as follows:

(a) For $M_h = 1.0$ ..... 30 mm on all faces.

(b) For $M_h > 1.0$ ..... 100 mm on the windward face and 30 mm elsewhere.

Where M_h is the hill shape multiplier obtained from AS/NZS 1170.2.

For serviceability limit states, 10 mm on all faces may be used.

NOTE: More detailed methods are given in ISO 12494 and in AS/NZS 1170.3 Supp 1, *Structural design actions—Snow and ice actions—Commentary* (Supplement to AS/NZS 1170.3:2002). Basic data on ice accumulation and type at a site would need to be collected in order to fully use ISO 12494. Care should be taken with such data to ensure the annual probability of exceedance is correct for use with AS/NZS 1170.0.

Accessed by UNIVERSITY OF SYDNEY on 10 Feb 2011

COPYRIGHT

SECTION 4 SNOW ACTION

4.1 GENERAL

The procedure for use in determining values for snow action (F_{sn}) shall be as given in this Section for use with the limit states design methods given in AS/NZS 1170.0.

Snow action (F_{sn}) shall be the sum of the forces resulting from the accumulation of snow determined by applying the snow load (s) to appropriate areas on the structure. The load shall be assumed to act vertically and shall refer to a horizontal projection of the area of the roof (see Figure 4.1).

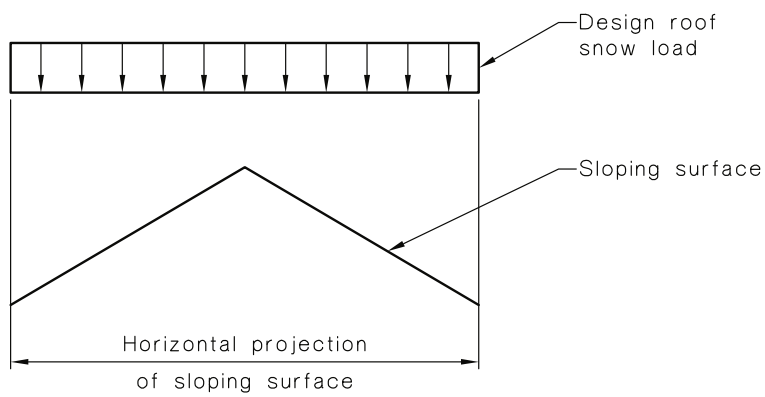

FIGURE 4.1 ROOF SNOW LOAD ON A SLOPING SURFACE

For alpine regions, various load cases shall be considered to account for the wind blowing from different directions, as the prevailing wind direction may not correspond to the wind directions during heavy snow falls. Design shall be based on the distribution that produces the most adverse effect in the member being designed.

Loads according to this Standard have been derived for natural deposition patterns and do not account for local imbalances on a roof due to artificial removal or redistribution of snow. In such cases, suitable load arrangements shall be considered.

Snow will usually be present on the roof of structures in alpine regions for approximately 3 months of the year.

Balconies may be considered as roofs for the purposes of determining snow action. The presence of obstructions shall be taken into account.

4.2 DESIGN SNOW LOADS

4.2.1 Roof snow load

The snow loads on a roof (s) shall be determined from the following:

$$s = s_g \, C_e \, \mu_i \qquad \ldots 4.2(1)$$

Accessed by UNIVERSITY OF SYDNEY on 10 Feb 2011

COPYRIGHT

where

s_g = characteristic value of snow load on the ground, in kilonewtons per square metre, as given in Section 5

C_e = exposure reduction coefficient, as given in Clause 4.2.2

μ_i = shape coefficients, as given in Sections 6 and 7 (appropriate for the roof shape)

For all sub-alpine areas where the ground snow load (s_g) is less than 0.75 kPa, design shall be on the basis of a balanced distributed load only of 0.4 kPa.

4.2.2 Exposure reduction coefficient

The exposure reduction coefficient (C_e) shall be as follows:

C_e = 1.0 for sub-alpine regions

= 1.0 for sheltered roofs

= 0.75 for semi-sheltered roofs

= 0.6 for windswept roofs

where the exposure categories are defined as follows:

(a) *Sheltered* Sites where the roof is protected from the wind by obstructions such as other structures, terrain features or numbers of closely spaced trees higher than the roof.

(b) *Semi-sheltered* Sites where the roof is only partially protected by numbers of scattered obstructions higher than the roof (e.g., scattered trees).

(c) *Windswept* Sites where the roof is exposed on all sides, with no protection provided by obstructions, trees, or terrain features higher than the roof.

Obstructions higher than the roof and within a distance of $10h_d$ or 25 m from a building, whichever is less, shall be taken to protect the roof, where h_d is the height of the obstruction above the roof level. Structures on the leeward slopes of hills shall be taken to be sheltered.

Consideration shall be given to the fact that the roof may be protected in the future and the exposure category chosen should be representative of that likely to prevail during the life of the structure. The values of 0.75 and 0.6 shall only be used where the roof area is clearly not sheltered and will not become sheltered from the prevailing wind during the snow season.

NOTE: Parapets or higher sections of the same roof can protect a roof and prevent snow from being blown off.

4.2.3 Snow overhanging the edge of a roof

The design of those parts of a roof cantilevered out beyond the walls shall take account of snow overhanging the edge of the roof (see Figure 4.2), in addition to the load on that part of the roof. The load due to the overhang (s_e) shall be assumed to act at the edge of the roof and shall be calculated as follows:

$$s_e = k(s_g C_e \mu_i)^2/\gamma \qquad \ldots 4.2(2)$$

Accessed by UNIVERSITY OF SYDNEY on 10 Feb 2011

COPYRIGHT

where

s_e = snow load per metre of roof edge due to overhang, in kilonewtons per metre

$s_g C_e \mu_i$ = roof snow load, taken as the value due to the most unfavourable distribution of snow load

k = coefficient to take account of the irregular shape of snow at roof edges, taken as 0.5

γ = average weight density of snow, in kilonewtons per cubic metre

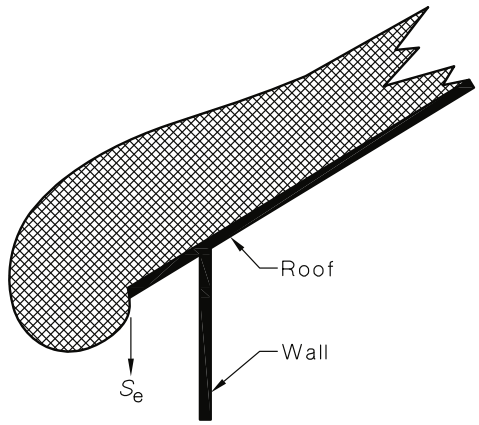

FIGURE 4.2 SNOW OVERHANGING THE EDGE OF A ROOF

4.2.4 Snow actions on snowguards and obstructions

For lateral actions on snowguards and obstructions, the coefficient of friction between the snow and the roof shall be assumed to be zero. Thus the lateral force (F) exerted by a sliding mass of snow, in the direction of slide, per unit width (see Figure 4.3) shall be as follows:

$$F = (s_g C_e \mu_i) b \sin\alpha$$

where

$s_g C_e \mu_I$ = roof snow load, taken as the value due to the most unfavourable distribution of snow load (including the drift load given in Clause 6.6)

b = distance on plan from the guard or obstruction to the ridge, in metres

α = pitch of roof, measured from the horizontal in degrees

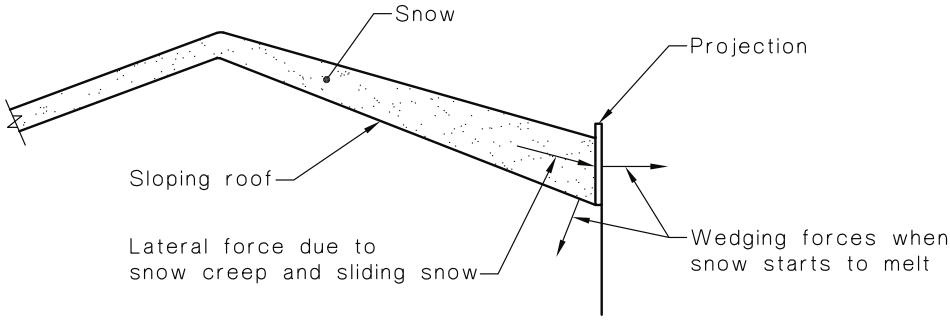

FIGURE 4.3 SLIDING FORCES ON A PROJECTION LOCATED ON A SLOPING ROOF

Accessed by UNIVERSITY OF SYDNEY on 10 Feb 2011

COPYRIGHT

SECTION 5 GROUND SNOW LOAD

5.1 GENERAL

A1 Values for the site ground snow load appropriate for regions in Australia and New Zealand where snow action occurs shall be as given for Australia and New Zealand in Clause 5.3 for alpine regions and Clause 5.4 for sub-alpine regions.

A1 The value of the site snow load is dependent on the altitude of the site and the characteristic ground snow load for the region. A special study shall be carried out for altitudes above those covered by this Section.

NOTE: Values of characteristic ground snow load (s_g) are based on measurements of accumulated snow depths in sheltered situations.

5.2 PROBABILITY FACTOR

A1 The value of the probability factor (k_P) for use in calculating the characteristic value of snow load on the ground (s_g) shall be as given in Table 5.1, where P is the annual probability of exceedance of the ground snow load.

A1

TABLE 5.1

PROBABILITY FACTOR (k_P)

Annual probability of exceedance of the action	Probability factor (k_P)	
(P)	Australia	New Zealand
1/2500	2.35	1.85
1/2000	2.25	1.8
1/1000	2.05	1.65
1/500	1.85	1.5
1/250	1.65	1.35
1/200	1.6	1.3
1/150	1.5	1.25
1/100	1.4	1.15
1/50	1.2	1.0
1/25	1.05	0.85
1/20	1.0	0.8

NOTE:

1 The values given for Australia are calculated from the following equation with appropriate rounding: $k_p = 0.26ln(1/P) + 0.22$.

2 The values given for New Zealand are calculated from the following equation rounded to the nearest 0.05: $k_p = 0.215ln(1/P) + 0.18$.

Accessed by UNIVERSITY OF SYDNEY on 10 Feb 2011

COPYRIGHT

5.3 GROUND SNOW LOADS FOR ALPINE REGIONS

For alpine regions in Australia and for alpine regions up to 1800 m altitude in New Zealand, the snow parameters [the ground snow load (s_g), terrain classification (k_t) and average weight density of snow (γ)] shall be as follows:

s_g = values as given for specific locations in Table 5.2 multiplied by the appropriate probability factor (k_P) given in Table 5.1

$s_g = k_P\, k_t (h_0/1000)^{4.4}$ for other locations at or above 1200 m altitude in Region AS (i.e., Southern Tablelands of New South Wales, ACT and Victoria, see Figure 2.1) . . . 5.3(1)

$s_g = k_P\, k_t [(h_0+300)/1000]^{4.4}$ for other locations at or above 900 m altitude in Tasmania (Region AT) . . . 5.3(2)

$s_g = k_P\, (h_0/1000)^{4.4}$ for all locations in the North Island of New Zealand at or above 1200 m altitude . . . 5.3(3)

$s_g = k_P\, [(h_0+450)/1000]^{3.2}$ for all locations in the South Island of New Zealand at or above 900 m altitude . . . 5.3(4)

γ = 4.3 kN/m^3

where

s_g = characteristic value of snow load on the ground, in kilonewtons per square metre

k_t = multiplying factor for terrain classification (Australia only), given in Table 5.2 or as follows:

= 0.7 for areas in terrain classification 1 (net removal of ground snow depth)

= 1.0 for areas in terrain classification 2 (no removal or increase of ground snow depth)

= 1.3 for areas in terrain classification 3 (net increase of ground snow depth)

h_0 = height above Australian Height Datum or New Zealand mean sea level, in metres

γ = average weight density of snow, in kilonewtons per cubic metre

Figures 5.1 to 5.7 give graphical representations of the equations.

5.4 GROUND SNOW LOADS FOR SUB-ALPINE REGIONS

5.4.1 General

For all sub-alpine areas where the ground snow load (s_g) is less than 0.75 kPa, design shall be as specified in Clause 4.2.1 (balanced distributed load only).

Accessed by UNIVERSITY OF SYDNEY on 10 Feb 2011

COPYRIGHT

5.4.2 Australia

For sub-alpine regions in Australia, the snow parameters [the ground snow load (s_g) and average weight density of snow (γ)] shall be as follows:

s_g = values as given for specific locations in Table 5.2 adjusted for the appropriate probability factor given in Table 5.1

$s_g = k_P\, k_l[2.8h_0/1000-1.2]$ for other locations in Region AS between altitude 600 m to 1200 m, and all altitudes in Regions AN and AC . . . 5.4(1)

$s_g = k_P\, k_l[2.8(h_0+300)/1000-1.2]$ for other locations in Region AT, altitude 300 m to 900 m . . . 5.4(2)

γ = 2.9 kN/m^3

where

k_l = multiplying factor for latitude, given as follows:

= 0.2 for Region AN (Northern Tablelands of N.S.W)

= 0.7 for Region AC (Central Tablelands of N.S.W)

= 1.0 for Region AS (Southern Tablelands of N.S.W., A.C.T. and Vic)

= 1.6 for Region AT (Tasmania)

For locations in sub-alpine regions with ground snow load less than 0.75 kPa, see Clause 4.2.1.

Figures 5.1 to 5.3 give graphical representations of the equations.

5.4.3 New Zealand

For sub-alpine regions in New Zealand, the snow parameters [the ground snow load (s_g) and average weight density of snow (γ)] shall be as follows:

$s_g = k_P[2.4(h_0 - 250)/1000]$ for Region N1, altitude 400 to 1200 m . . . 5.4(3)

$s_g = k_P[2.7(h_0 - 150)/1000]$ for Region N2, altitude 200 to 900 m . . . 5.4(4)

$s_g = k_P[3(h_0 - 150)/1000]$ for Region N3, altitude 150 to 900 m . . . 5.4(5)

$s_g = k_P 1.2[3h_0/1000 + 0.3]$ for Region N4, altitude < 400 m . . . 5.4(6)

$= k_P 1.2[2h_0/1000 + 0.7]$ for Region N4, altitude ≥ 400 m . . . 5.4(7)

$s_g = k_P 1.2[1.5h_0/1000 + 0.3]$ for Region N5, altitude < 400 m . . . 5.4(8)

$= k_P 1.2[2h_0/1000 + 0.1]$ for Region N5, altitude ≥ 400 m . . . 5.4(9)

γ = 2.9 kN/m^3

Figures 5.4 to 5.7 give graphical representations of the equations.

For locations in sub-alpine regions with ground snow load less than 0.75 kPa, see Clause 4.2.1.

Accessed by UNIVERSITY OF SYDNEY on 10 Feb 2011

COPYRIGHT

TABLE 5.2

GROUND SNOW LOADS FOR PARTICULAR AUSTRALIAN SITES

Location	Height above Australian Datum Height (h_0), m	Terrain classification	Ground snow load (s_g), kPa for probability of exceedance	
			1/20 (k_P = 1.0)	1/150 (k_P = 1.5)
ALPINE REGIONS				
New South Wales				
Cabramurra	1 480	2	5.5	8.3
Charlotte Pass Village	1 800	2	13.3	20
Diggers Creek	1 600	2	7.9	11.9
Guthega Village	1 650	2	9.0	13.5
Kiandra	1 372	2	4.0	6
Mount Blue Cow	1 900	1-3	11.8 to 21.9	17.7 to 32.9
Mount Kosciuszko	2 228	1-3	23.8 to 44.1	35.7 to 66.2
Mount Selwyn	1 580	1	5.2	7.8
Perisher Range	2 050	1-3	16.5 to 30.6	24.8 to 45.9
Perisher Valley	1 740	2	11.4	17.1
Rules Point	1 311	1	2.3	3.5
Sawpit Creek	1 200	2	2.2	3.3
Smiggin Holes	1 650	2	9.0	13.5
Smiggin Range	1 850	1-3	10.5 to 19.5	15.8 to 29.3
Thredbo:				
Crackenback	1 950	1-3	13.2 to 24.5	19.8 to 36.8
Kareela	1 860	2	15.3	14.7
Merritts Spur	1 680	2	9.8	14.7
Thredbo Village	1 500	2	6.0	9
Three Mile Dam	1 463	2	5.3	8
Wilsons Valley	1 500	2	6.0	9
Tasmania				
Ben Lomond Ski Field	1 200	2	6.0	9
Cradle Valley	1 000	2	3.2	4.8
Great Lake Area	1 000	2	3.2	4.8
Mt Field Ski Field	1 200	1	4.2	6.3
Victoria				
Baw Baw Plateau	1 500	2	6.0	9
Dinner Plain	1 580	2	7.5	18.5
Donna Buang	1 250	2	2.7	4.9
Falls Creek:				
Summit Area	1 760	1	8.4	15.1
Sun Valley	1 600	3	10.3	18.5
Village Bowl	1 500	2	6.0	9
Lake Mountain	1 400	2	4.4	6.6
Mount Buffalo:				
Chalet	1 350	2	3.7	5.6
Dingo Dell	1 440	2	5.0	7.5
Tatra	1 500	2	6.0	9

(*continued*)

Accessed by UNIVERSITY OF SYDNEY on 10 Feb 2011

COPYRIGHT

TABLE 5.2 (*continued*)

Location	Height above Australian Datum Height (h_0), m	Terrain classification	Ground snow load (s_g), kPa for probability of exceedance	
			1/20 (k_P = 1.0)	1/150 (k_P = 1.5)
Mount Buller:				
Baldy	1 737	1	7.9	11.9
Village	1 585	2	7.6	11.4
Mount Hotham:				
Davenport	1 760	2	12.0	18
Village Centre	1 760	1	8.4	12.6
Mount Stirling	1 737	1	7.9	11.9
SUB-ALPINE REGIONS				
Central Tablelands of NSW				
Blackheath	1 065	—	1.3	2
Blayney	867	—	0.9	1.4
Crookwell	887	—	0.9	1.4
Katoomba	1017	—	1.2	1.8
Lithgow	920	—	1.0	1.5
Mt Victoria	1 044	—	1.3	2
Orange	867	—	0.9	1.4
Northern Tablelands of NSW				
Guyra	1 320	—	0.7	1.1
Southern Tablelands of NSW				
Adaminaby	1 010	—	1.7	2.6
Anglers Reach	1 180	—	2.1	3.2
Berridale	860	—	1.2	1.8
Bombala	705	—	0.8	1.2
Bullocks Flat	1 150	—	2.0	3
Cooma	800	—	1.0	1.5
Dalgety	760	—	1.0	1.5
Eucumbene Cove	1 200	—	2.2	3.3
Jindabyne	930	—	1.4	2.1
Kalkite	930	—	1.4	2.1
Nimmitabel	1 056	—	1.8	2.7
Old Adaminaby	1180	—	2.1	3.2
Providence Portal	1 110	—	2.1	3.2
Tumbarumba	693	—	0.8	1.2
Tyrolean Village	930	—	1.4	2.1
Yarrangobilly Village	1 050	—	1.6	2.4
Tasmania				
Bothwell	360	—	1.0	1.5
Derwent Bridge	750	—	2.8	4.2
Intertaken	750	—	2.8	4.2
Strathgordon	400	—	1.2	1.8
Tarraleah	600	—	2.1	3.2
The Spring (Fern Tree)	732	—	2.7	4.1
Tullah	400	—	1.2	1.8
Waratah	400	—	1.2	1.8

NOTES:

1 All of the Northern and Central Tablelands of NSW are classified as sub-alpine regions, including areas where the elevation is in excess of 1200 m.

2 In Victoria, there are very few towns in sub-alpine regions which receive significant snow falls.

Accessed by UNIVERSITY OF SYDNEY on 10 Feb 2011

COPYRIGHT

A1

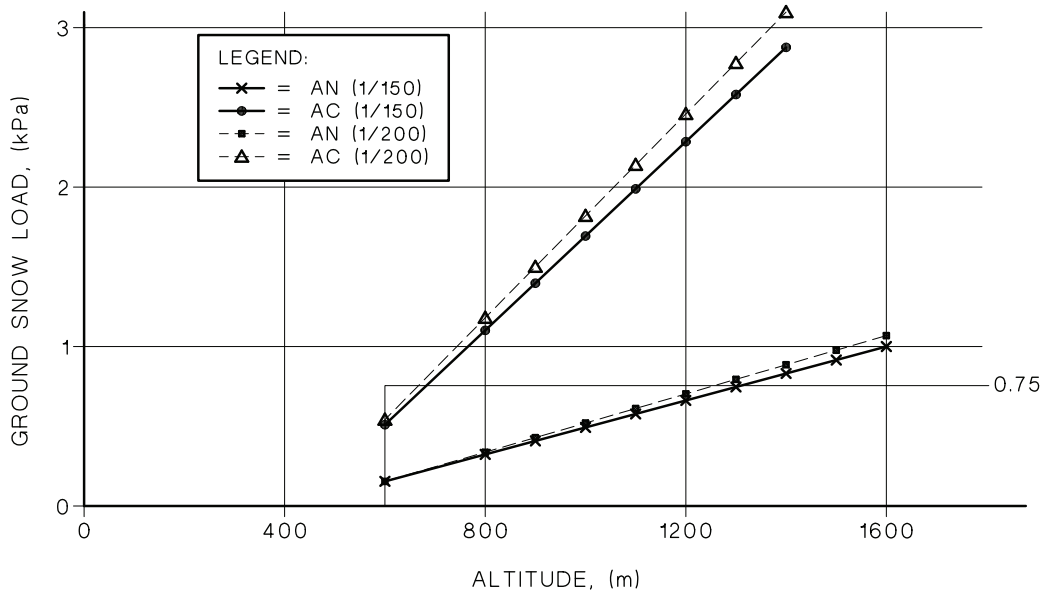

NOTE: This Figure is provided as a quick check only. Clauses 5.3 and 5.4 and the appropriate k_P factor from Clause 5.2 should be used for design. All altitudes in Regions AN and AC are sub-alpine.

FIGURE 5.1 REGIONS AN AND AC—GROUND SNOW LOAD (s_g) FOR PROBABILITY OF EXCEEDANCE OF 1/150 and 1/200 (SUB-ALPINE)

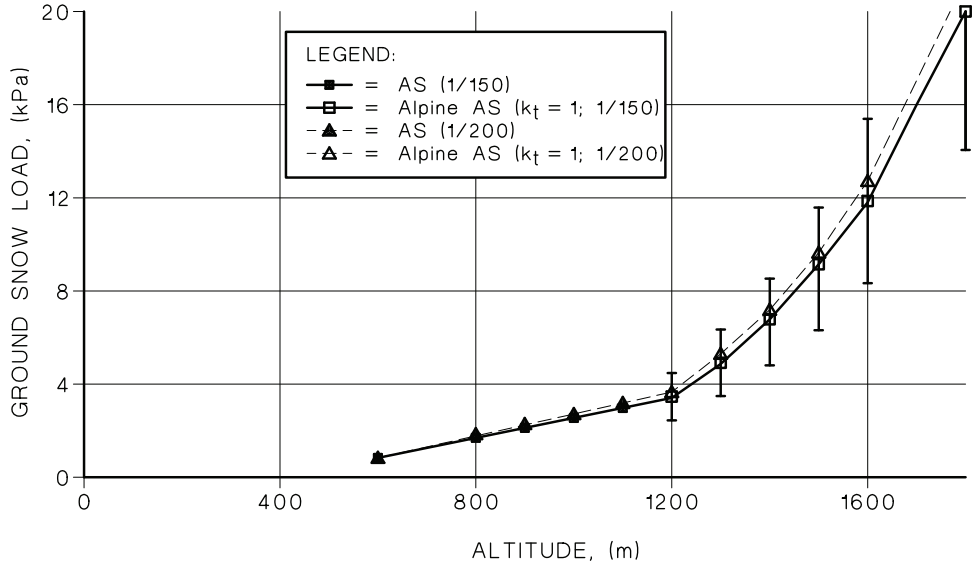

NOTE: This Figure is provided as a quick check only. Clauses 5.3 and 5.4 and the appropriate k_P factor from Clause 5.2 should be used for design. Error bars show range of values for k_t factor (1/150 only). Values above 20 kPa are not shown.

FIGURE 5.2 REGION AS—GROUND SNOW LOAD (s_g) FOR PROBABILITY OF EXCEEDANCE OF 1/150 and 1/200 (SUB-ALPINE AND ALPINE)

Accessed by UNIVERSITY OF SYDNEY on 10 Feb 2011

COPYRIGHT

A1

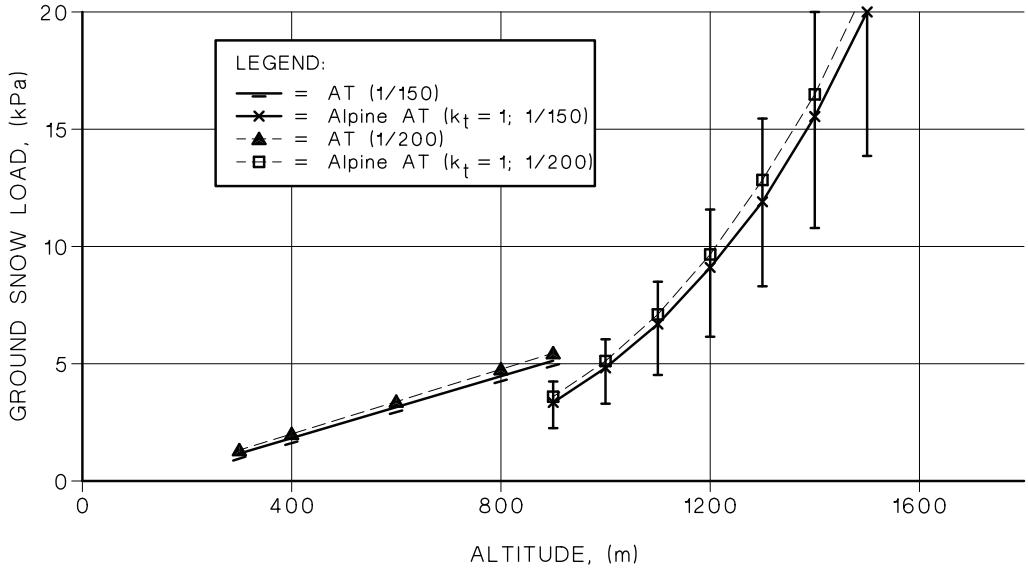

NOTE: This Figure is provided as a quick check only. Clauses 5.3 and 5.4 and the appropriate k_P factor from Clause 5.2 should be used for design. Error bars show range of values for k_t factor (1/150 only). Values above 20 kPa are not shown.

FIGURE 5.3 REGION AT—GROUND SNOW LOAD (s_g) FOR PROBABILITY OF EXCEEDANCE OF 1/150 and 1/200 (TASMANIA, SUB-ALPINE AND ALPINE)

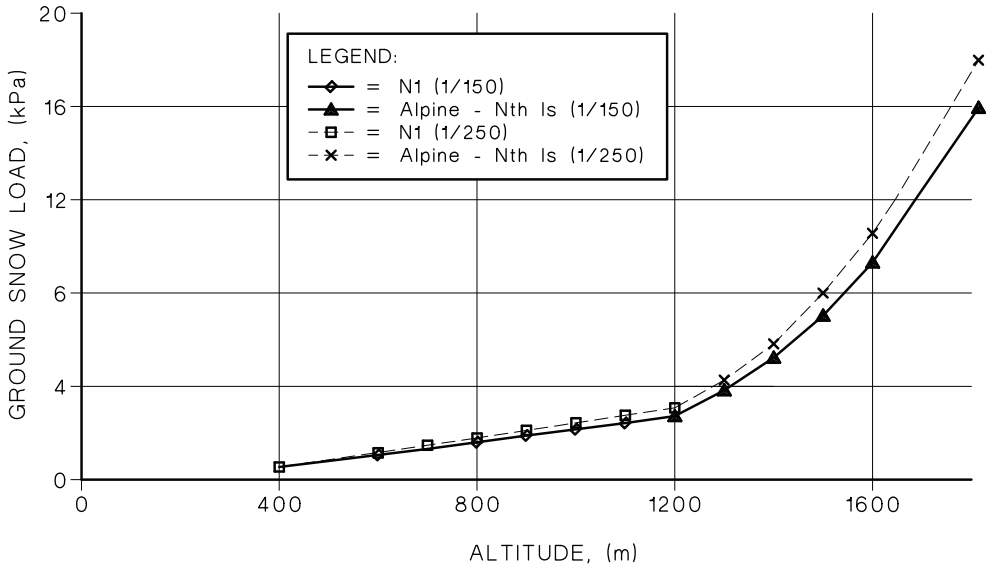

NOTE: This Figure is provided as a quick check only. Clauses 5.3 and 5.4 and the appropriate k_P factor from Clause 5.2 should be used for design.

FIGURE 5.4 REGION N1—GROUND SNOW LOAD (s_g) FOR PROBABILITY OF EXCEEDANCE OF 1/150 and 1/250 (NORTH ISLAND, SUB-ALPINE AND ALPINE)

Accessed by UNIVERSITY OF SYDNEY on 10 Feb 2011

COPYRIGHT

A1

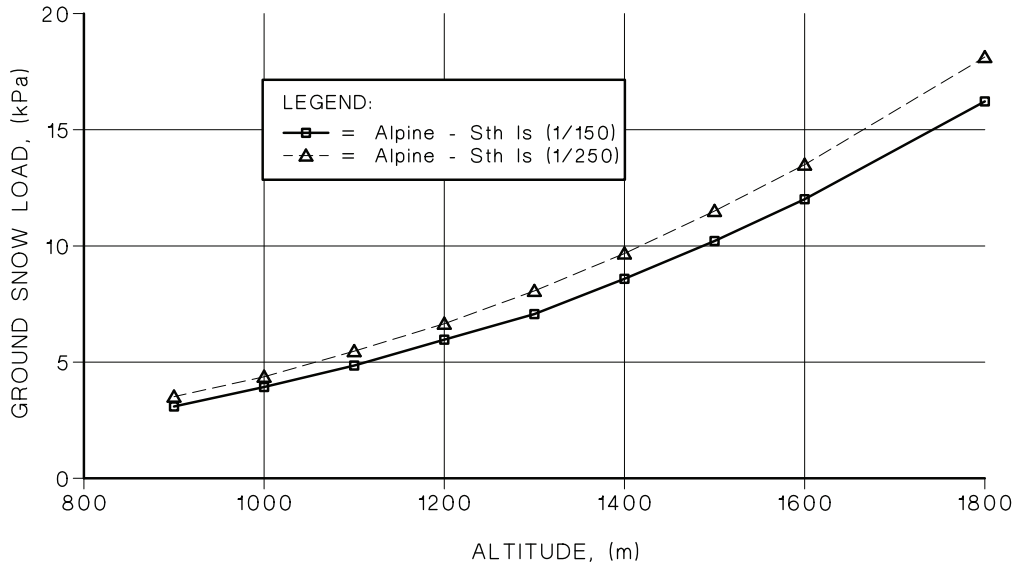

NOTE: This Figure is provided as a quick check only. Clauses 5.3 and 5.4 and the appropriate k_P factor from Clause 5.2 should be used for design.

FIGURE 5.5 SOUTH ISLAND, ALPINE ONLY—GROUND SNOW LOAD (s_g) FOR PROBABILITY OF EXCEEDANCE OF 1/150 and 1/250

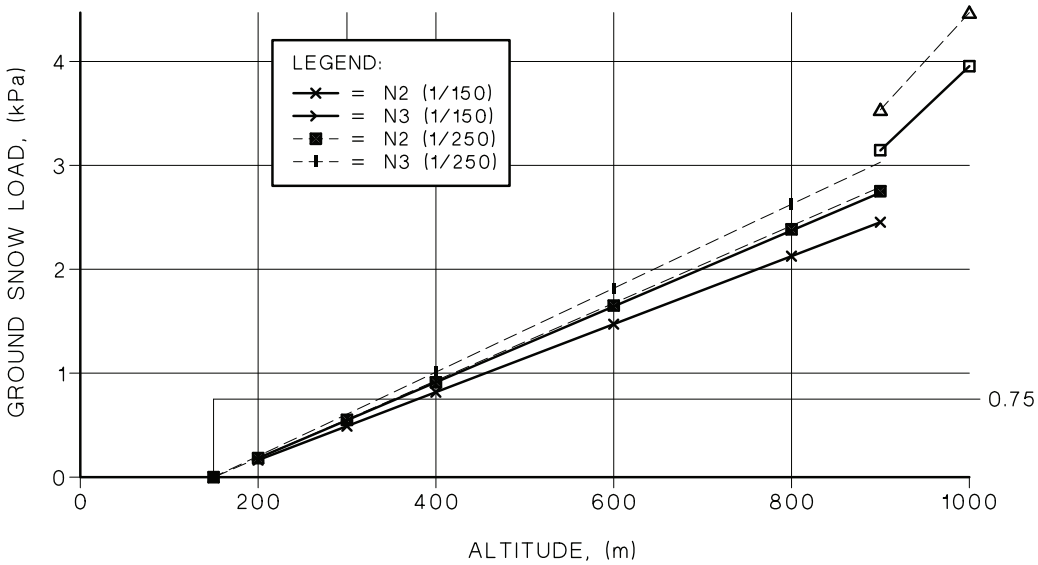

NOTE: This Figure is provided as a quick check only. Clauses 5.3 and 5.4 and the appropriate k_P factor from Clause 5.2 should be used for design. Values are specified up to 1800 m.

FIGURE 5.6 REGION N2 AND N3—GROUND SNOW LOAD (s_g) FOR PROBABILITY OF EXCEEDANCE OF 1/150 and 1/250 (SOUTH ISLAND, SUB-ALPINE AND IN PART ALPINE)

Accessed by UNIVERSITY OF SYDNEY on 10 Feb 2011

COPYRIGHT

A1

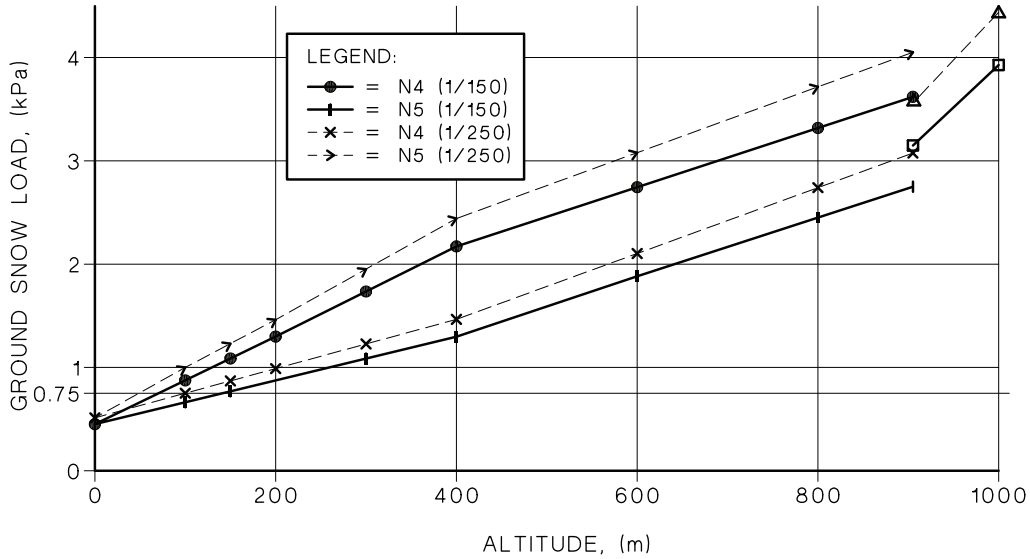

NOTE: This Figure is provided as a quick check only. Clauses 5.3 and 5.4 and the appropriate k_P factor from Clause 5.2 should be used for design. Values are specified up to 1800 m.

FIGURE 5.7 REGION N4 AND N5—GROUND SNOW LOAD (s_g) FOR PROBABILITY OF EXCEEDANCE OF 1/150 and 1/250 (SOUTH ISLAND, SUB-ALPINE AND IN PART ALPINE)

Accessed by UNIVERSITY OF SYDNEY on 10 Feb 2011

COPYRIGHT

SECTION 6 SHAPE COEFFICIENTS FOR ALPINE REGIONS

6.1 GENERAL

Shape coefficients (μ_i) for accumulation of snow on various roof shapes in alpine regions shall be as given in this Section. Shape coefficients for sub-alpine areas shall be as given in Section 7.

Shape coefficients represent the shape of snow accumulation and, for each case considered, will vary in value across the roof. They are based on the following:

(a) For buildings of rectangular plan form, the distribution of the snow load in the direction parallel to the eaves is assumed to be uniform, corresponding to an assumed wind direction normal to the eaves.

(b) Values are relevant to one specific wind direction.

6.2 BALANCED SNOW LOAD

The shape coefficient for a balanced load on a sloping roof (μ_1) shall be calculated from the angle of slope as given in Figure 6.1.

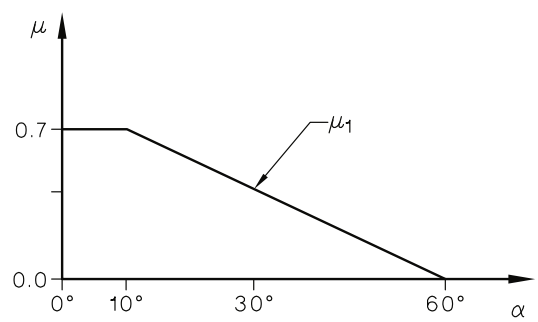

$\mu_1 = 0.7(60 - \alpha)/50$, but in the range $0.7 \geq \mu_1 \geq 0$

FIGURE 6.1 BALANCED SHAPE COEFFICIENT ON A SLOPE (μ_1)

6.3 MONO-PITCHED ROOFS

For mono-pitched roofs, the shape coefficients shall be as given in Figure 6.2 (see also Figure 6.1). Unbalanced loading need not be considered where the roof slope is less than 10°, as the snow will not shed from those surfaces with a slope less than 10°.

This Clause applies where snow is not prevented from sliding off the roof. Where the lower edge of the roof is terminated with a parapet, snow fence, or other obstruction, the shape coefficient shall be determined in accordance with Clause 6.5.

Accessed by UNIVERSITY OF SYDNEY on 10 Feb 2011

COPYRIGHT

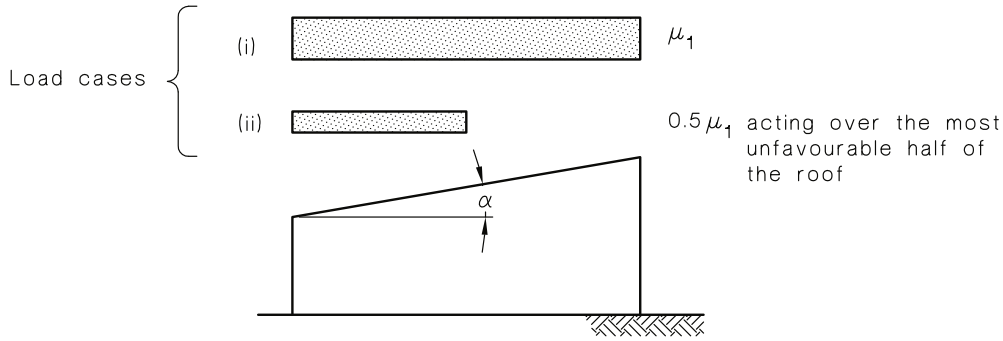

$\mu_1 = 0.7(60 - \alpha)/50$, but in the range $0.7 \geq \mu_1 \geq 0$

FIGURE 6.2 MONO-PITCHED ROOF

6.4 DUO-PITCHED ROOFS

For duo-pitched roofs, the shape coefficients shall be as given in Figure 6.3 (see also Figure 6.1). Design shall be based on the most unfavourable load arrangement shown in Figure 6.3 (iii, iv, v). Unbalanced loading need not be considered where the roof slope is less than 10°, as the snow will not shed from those surfaces with a slope less than 10°.

This Clause applies where snow is not prevented from sliding off the roof. Where the lower edge of the roof is terminated with a parapet, snow fence, or other obstruction or where the eaves are low to the ground, the shape coefficient shall be determined in accordance with Clause 6.5.

For asymmetrical gable or hip roofs, each side of the roof shall be treated as one half of the corresponding symmetrical roof.

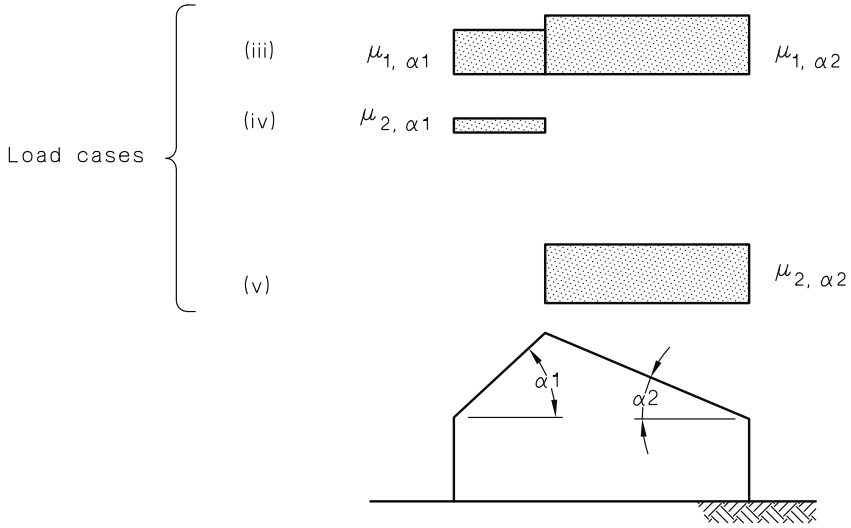

$\mu_2 = 0.56(60 - \alpha)/50$, but in the range $0.56 \geq \mu_2 \geq 0$, and $C_e \geq 0.95$

FIGURE 6.3 DUO-PITCHED ROOFS

Accessed by UNIVERSITY OF SYDNEY on 10 Feb 2011

COPYRIGHT

6.5 MULTI-PITCHED ROOFS

For multi-pitched roofs, the shape coefficients shall be the balanced or asymmetric snow loads derived from Clause 6.4 or the shape coefficients (drift loading) given in Figure 6.4, whichever produces the most adverse effect (se also Figure 6.1). Unbalanced loading need not be considered where both roof slopes are less than 10°, as the snow will not shed from those surfaces with a slope less than 10°.

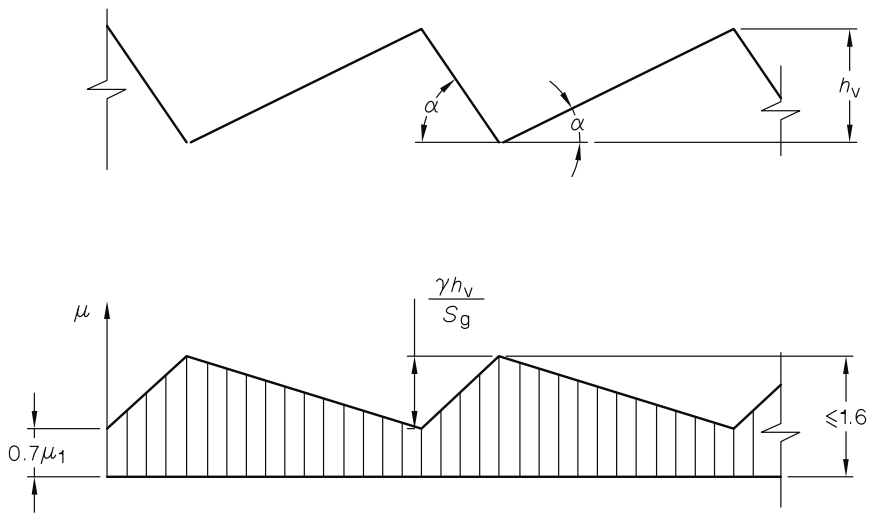

FIGURE 6.4 MULTI-PITCHED ROOFS

6.6 DRIFTING CAUSED BY OBSTRUCTIONS HIGHER THAN THE ROOF

This Clause shall apply to roofs as illustrated in Figure 6.5(a) and where there is an abrupt change of height occurring in a roof.

For cases where the roof being designed is protected by an adjacent higher obstruction, the shape coefficients shall be the values given in Clauses 6.3 to 6.5 or the shape coefficients (drift loading) given in Figure 6.5(b), whichever produces the most adverse effect.

The additional design situation given in Figure 6.5(c) shall be considered where the roof has the following geometry:

$\alpha_1 > 15°$

$\alpha_1 > \alpha_2$

$h_d \leq s_g/\gamma$

Accessed by UNIVERSITY OF SYDNEY on 10 Feb 2011

COPYRIGHT

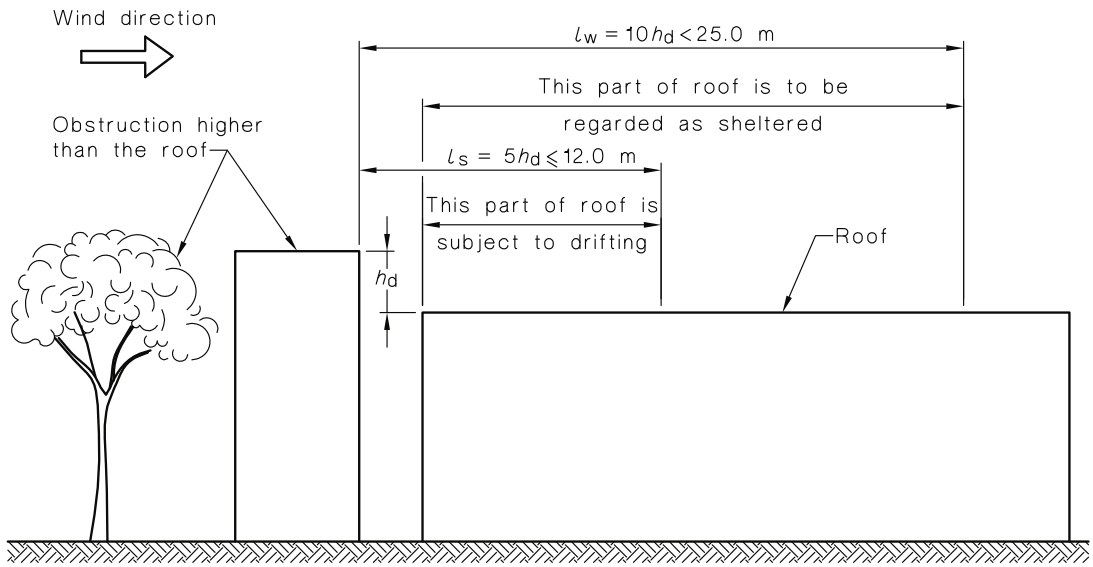

FIGURE 6.5(a) ILLUSTRATION SHOWING SHELTERING OF AND DRIFTING ON A SHADED ROOF

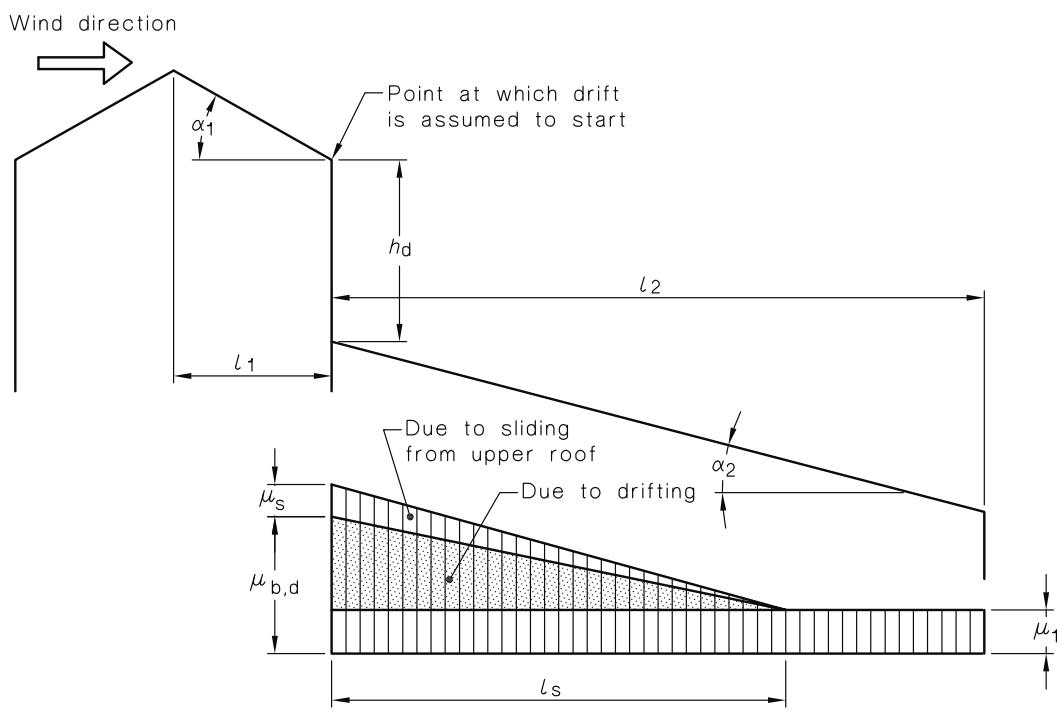

where $l_s = 5\ h_d$, but 3 m ≤ l_s ≤ 12 m

Angle of pitch of roof,	$0° \leq \alpha \leq 10°$	$10° < \alpha$
Shape coefficient μ_s	0.0	$\mu_1 l_1 / l_s$ (using μ_1 for the upper roof).
Shape coefficient $\mu_{b,d}$	$\gamma h_d / s_g$ but in the range $0.7 \leq \mu_{b,d} \leq 2.0$	

In cases where $\alpha_2 > 10°$, ($\mu_s + \mu_{b,d}$) may be multiplied by $(60 - \alpha_2)/50$

In cases where $l_2 < l_s$, the coefficient at the end of the lower roof shall be determined by interpolation between μ_1 and ($\mu_s + \mu_{b,d}$) truncated at the end of the lower roof.

FIGURE 6.5(b) ILLUSTRATION SHOWING DRIFTING ON SHELTERED ROOFS

Accessed by UNIVERSITY OF SYDNEY on 10 Feb 2011

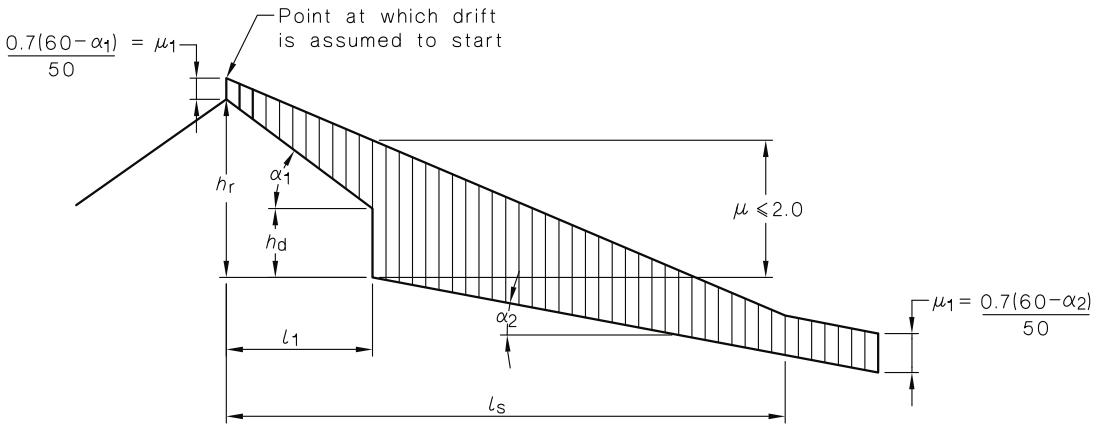

$l_s = 5h_r$, but 3 m ≤ l_s ≤ 12 m

In cases where α_2 > 10 degrees, the shape coefficient at the step may be multiplied by (60 – α_2)/50.

In cases where $l_1 + l_2 < l_s$, the coefficient at the end of the lower roof shall be determined by truncating the drift slope at the end of the lower roof.

FIGURE 6.5(c) ILLUSTRATION SHOWING DRIFTING ON LOWER ROOFS AND ADJACENT UPPER ROOFS

6.7 DRIFTING AT PROJECTIONS AND OBSTRUCTIONS

For projections and obstructions, the shape coefficients shall be assumed to be triangularly distributed on the leeward side of the projection as given in Figure 6.6. Drifts on either side of the projection and on both sides at the same time shall be taken into account.

Projections less than 2 m in width are not considered to be subject to significant drifting.

NOTES:

1 In windy conditions, drifting of snow can occur on any roof that has obstructions, as these cause areas of aerodynamic shade in which the snow accumulates.

2 A series of closely spaced vertical projections on a roof such as dormer windows may prevent snow sliding off the roof due to ice or frozen snow jamming between the projections. Therefore, they should be treated as a continuous projection.

3 Where a projection is located on a sloping roof, the projection itself and the adjacent roof surface may be subject to very high wedging forces. These forces should be taken into account in the design.

Accessed by UNIVERSITY OF SYDNEY on 10 Feb 2011

COPYRIGHT

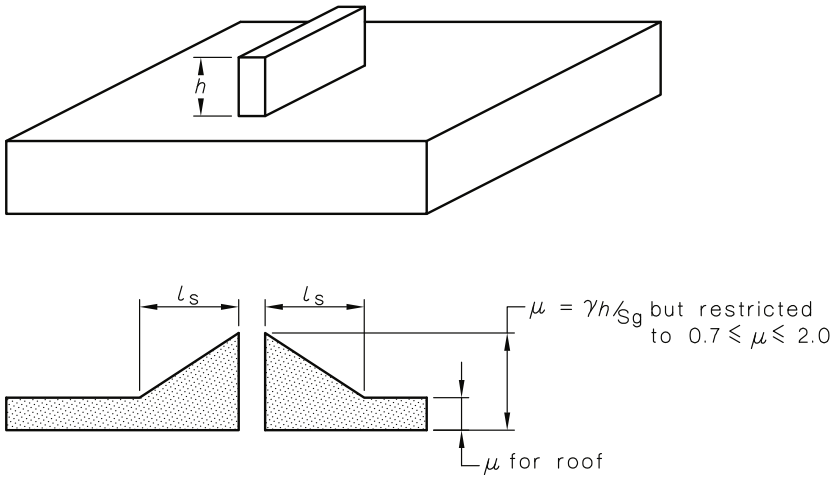

$l_s = 5h$, but 3 m ≤ l_s ≤ 9 m and l_s is not greater than the distance from the projection to the roof edge.

FIGURE 6.6 PROJECTIONS AND OBSTRUCTIONS

6.8 CYLINDRICAL ROOFS

For cylindrical roofs, the shape coefficients shall be as given in Figure 6.7. Cylindrical roofs include all cylindrical shells of any shape and single convex curvature. This Clause applies where snow is not prevented from sliding off the roof. For $h/l_1 \leq 0.07$, unbalanced load need not be considered. Where α does not reach 60° before eaves, the snow shape shall be truncated at the eaves.

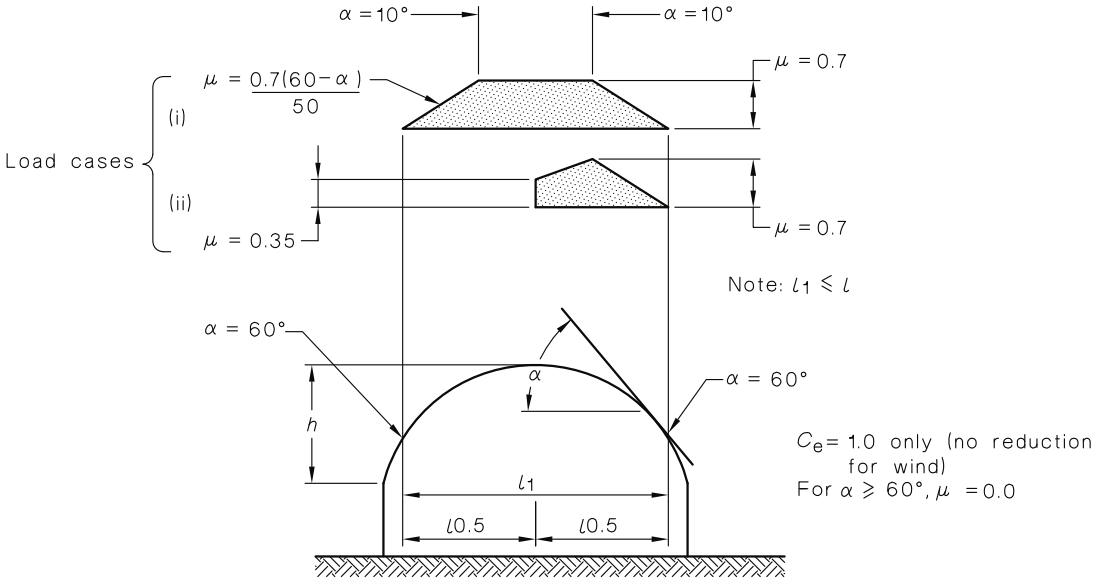

FIGURE 6.7 CYLINDRICAL ROOFS

Accessed by UNIVERSITY OF SYDNEY on 10 Feb 2011

COPYRIGHT

SECTION 7 SHAPE COEFFICIENTS FOR SUB-ALPINE REGIONS

7.1 GENERAL

Shape coefficients (μ_i) for sub-alpine areas shall be as given in this Section.

NOTES:

1 Where the ground snow load (s_g) is less than 0.75 kPa, design is for a balanced distributed load only (see Clause 4.2.1).

2 Sub-alpine regions are regions where wind speeds are high and all the snow normally melts and clears between individual weather systems. Therefore, the maximum snow load is due to a single or a short series of snow falls.

7.2 SHAPE COEFFICIENTS AS FOR ALPINE REGIONS

For pitched roofs, the shape coefficient shall be as given in Figure 7.1.

This Clause applies where snow is not prevented from sliding off the roof. Where the lower edge of the roof is terminated with a parapet, snow fence, or other obstruction, then the shape coefficient shall be determined in accordance with Clause 7.3.

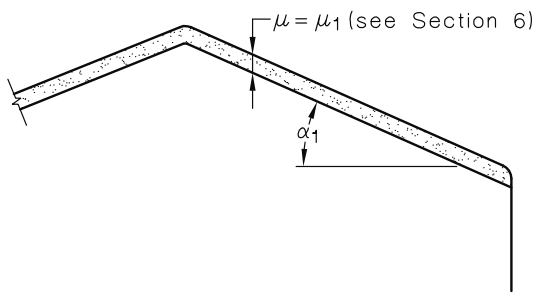

FIGURE 7.1 SLOPING ROOFS (SUB-ALPINE)

7.3 OBSTRUCTED ROOFS

For obstructed roofs, design shall be the worst case of a balanced shape coefficient of 0.7 or an average shape coefficient of 0.7 distributed for drift and sliding according to Figure 7.2.

Accessed by UNIVERSITY OF SYDNEY on 10 Feb 2011

COPYRIGHT

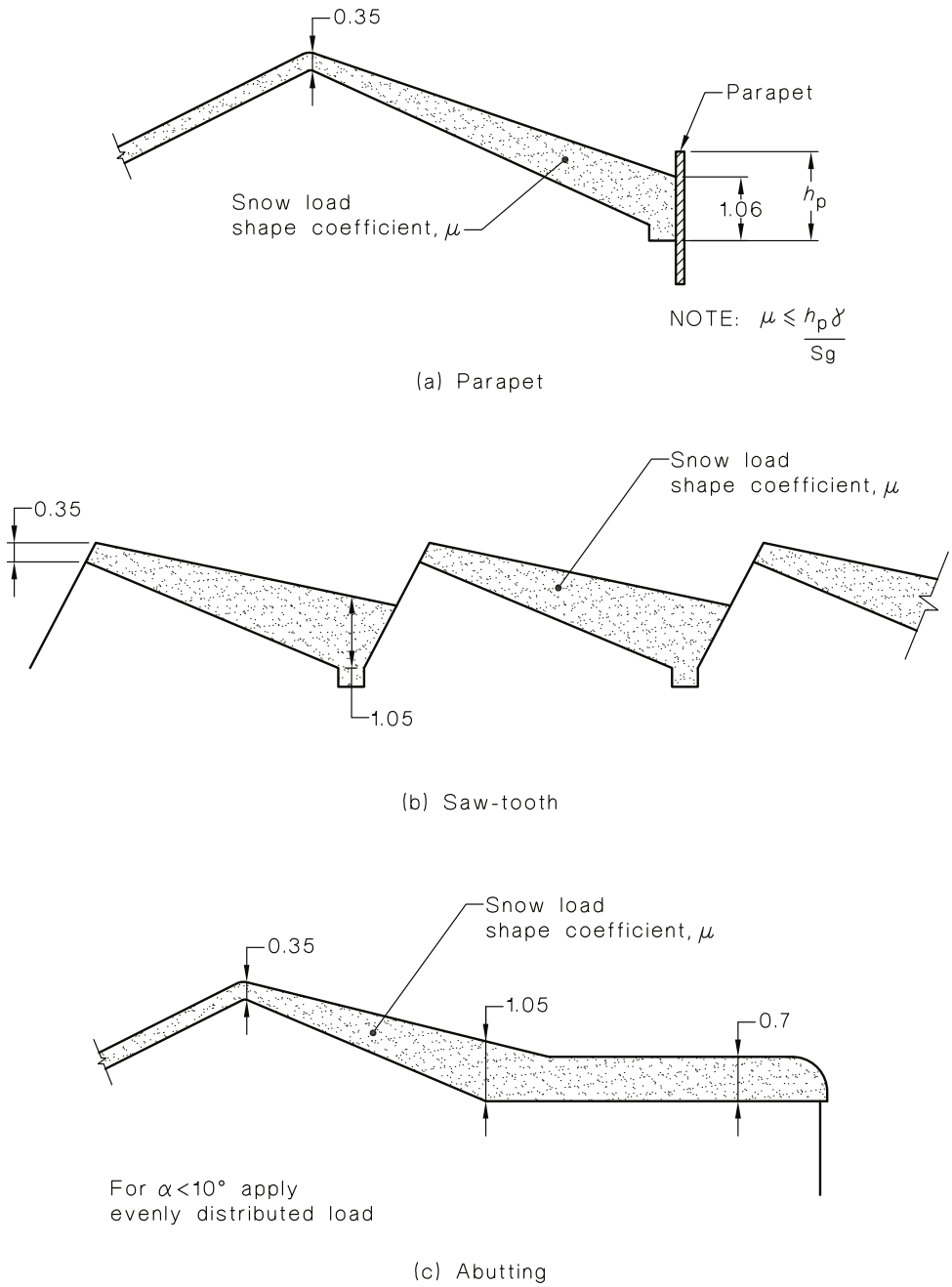

FIGURE 7.2 SHAPE COEFFICIENTS ON DIFFERENT TYPES OF OBSTRUCTED SLOPING ROOFS (SUB-ALPINE)

7.4 DRIFTING ON LOWER ROOFS

For unobstructed flat or pitched roofs with an abrupt step, the shape coefficient shall be as given in Figure 7.3.

NOTE: The factor $(60 - \alpha_2)/50$ allows for the reduction in snow load when the slope of the lower roof is greater than 10°.

Accessed by UNIVERSITY OF SYDNEY on 10 Feb 2011

COPYRIGHT

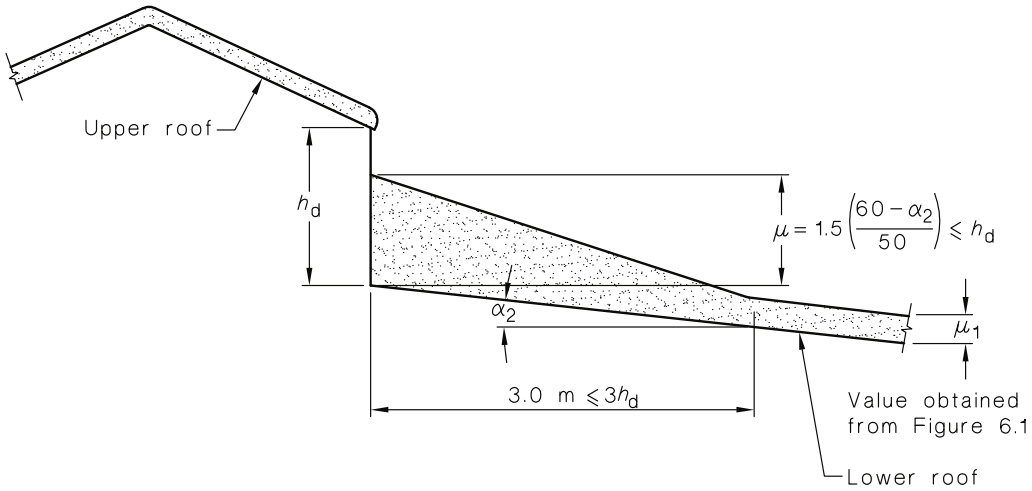

FIGURE 7.3 DRIFTING ON LOWER ROOFS (SUB-ALPINE)

7.5 CURVED ROOFS

For curved roofs, the shape coefficient shall be calculated for 5 equal segments and applied for balanced and unbalanced load cases, as given in Figure 7.4. The shape coefficient shall be based on the average slope within each of the segments and calculated as μ_1 (see Section 6).

NOTE: Curved roofs are particularly sensitive to unbalanced loading.

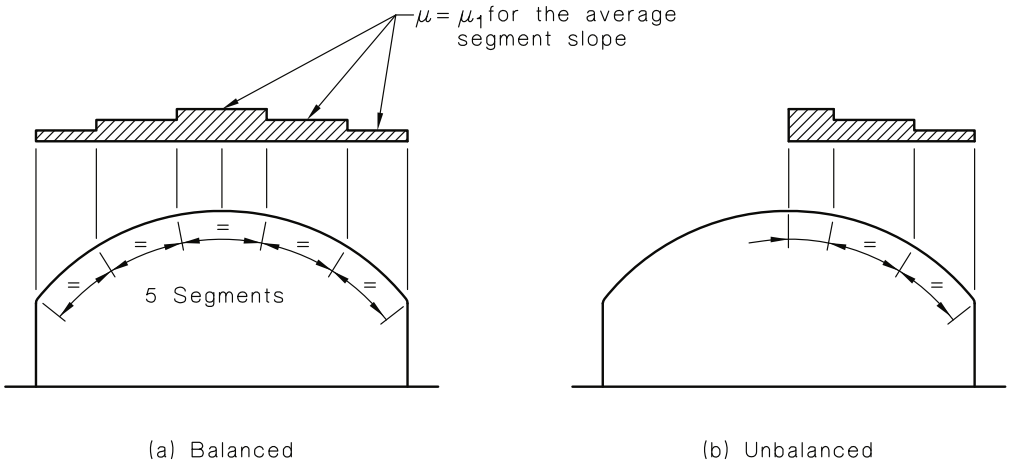

FIGURE 7.4 TYPES OF SNOW LOAD ON CURVED ROOFS (SUB-ALPINE)

Accessed by UNIVERSITY OF SYDNEY on 10 Feb 2011

COPYRIGHT

APPENDIX A

BIBLIOGRAPHY

(Informative)

ISO 12494 Atmospheric icing on structures

Accessed by UNIVERSITY OF SYDNEY on 10 Feb 2011

COPYRIGHT

NOTES

Accessed by UNIVERSITY OF SYDNEY on 10 Feb 2011

AMENDMENT CONTROL SHEET

AS/NZS 1170.3:2003

Amendment No. 1 (2007)

REVISED TEXT

SUMMARY: This Amendment applies to the Preface, Clauses 1.1, 1.2, 1.3, 1.4, 2.2(c), 5.1, 5.2, Table 5.1, Figures 5.1 to 5.7 and Appendix A

Published on 2 April 2007.

Accessed by UNIVERSITY OF SYDNEY on 10 Feb 2011

Standards Australia

Standards Australia is an independent company, limited by guarantee, which prepares and publishes most of the voluntary technical and commercial standards used in Australia. These standards are developed through an open process of consultation and consensus, in which all interested parties are invited to participate. Through a Memorandum of Understanding with the Commonwealth government, Standards Australia is recognized as Australia's peak national standards body.

Standards New Zealand

The first national Standards organization was created in New Zealand in 1932. The Standards Council of New Zealand is the national authority responsible for the production of Standards. Standards New Zealand is the trading arm of the Standards Council established under the Standards Act 1988.

Australian/New Zealand Standards

Under a Memorandum of Understanding between Standards Australia and Standards New Zealand, Australian/New Zealand Standards are prepared by committees of experts from industry, governments, consumers and other sectors. The requirements or recommendations contained in published Standards are a consensus of the views of representative interests and also take account of comments received from other sources. They reflect the latest scientific and industry experience. Australian/New Zealand Standards are kept under continuous review after publication and are updated regularly to take account of changing technology.

International Involvement

Standards Australia and Standards New Zealand are responsible for ensuring that the Australian and New Zealand viewpoints are considered in the formulation of international Standards and that the latest international experience is incorporated in national and Joint Standards. This role is vital in assisting local industry to compete in international markets. Both organizations are the national members of ISO (the International Organization for Standardization) and IEC (the International Electrotechnical Commission).

Visit our web sites

www.standards.org.au www.standards.co.nz

www.standards.com.au

Accessed by UNIVERSITY OF SYDNEY on 10 Feb 2011

Accessed by UNIVERSITY OF SYDNEY on 10 Feb 2011

GPO Box 476 Sydney NSW 2001
Administration
Phone (02) 8206 6000
Fax (02) 8206 6001
Email mail@standards.com.au
Customer Service
Phone 1300 65 46 46
Fax 1300 65 49 49
Email sales@standards.com.au
Internet www.standards.org.au

Level 10 Radio New Zealand House
155 The Terrace Wellington 6001
(Private Bag 2439 Wellington 6020)
Phone (04) 498 5990
Fax (04) 498 5994
Customer Services (04) 498 5991
Information Service (04) 498 5992
Email snz@standards.co.nz
Internet www.standards.co.nz

ISBN 0 7337 4914 3

Printed in Australia

This page has been left intentionally blank.

Accessed by UNIVERSITY OF SYDNEY on 10 Feb 2011